AquaArch™

EXFILTRATION SYSTEM

STORM WATER SOLUTIONS

A Product by Premier Concrete Products

AquaArch™ Exfiltration System brings beauty and functionality to a sustainable design, allowing rainwater to drain naturally through the spaces between the units.

AquaArch™ delivers the solution for stormwater runoff.

The water is stored within the arched chamber and aggregate reservoir where the water is permitted to migrate into the earth and recharge to the ground. Thus reducing storm water run-off and naturally recharging our aquiers which results in promoting our environment.

The system is designed to reduce stormwater runoff, control pollutants and reduce downstream erosion. Compared to other permeable paver products, **AquaArch™** is the most versatile permeable pavement system in the market today. **AquaArch™** Exfiltration System qualifies as a Best Management Practice (BMP) for storm water management and can help you earn points towards LEED® certification.

AquaArch™ will help preserve the environment and our most precious resource of all, water.

Features & Benefits:

- Cost-Effective
- Increases land use
- Ease of Installation
- Speed of Construction
- Stormwater Performance
- Can reduce runoff as much as 100%
- Replaces detention / retention ponds
- Permeability (Infiltration & Exfiltration)
- Reduces pollution from rainwater runoff

Applications:

- Commercial Parking Lots
- Retail Centers
- Churches
- Schools
- Government Facilities
- Industrial Parking Areas
- Oil & Gas Facilities
- Residential
- Driveways
- Developments

AquaArch ™
has superb permeable paver characteristics. Join us now as we take Stormwater Solutions to a new level of cosmetic perfection!

AquaArch™

Physical Properties

Size	Dimensions (in. nominal)	Unit Weight (lbs.)	Coverage SF/ Unit	Capacity in/ft^2
8"	8 X 8 X 6	23	.4444	4.69
12"	8 x 12 x 6	33	.6667	4.97

Note: Storage Capacity includes 12" of 3/4 Clean Crushed Stone

8" x 8" (square)

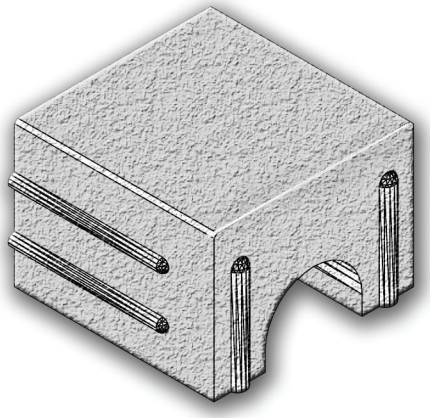

8" x 12" (rectangle)

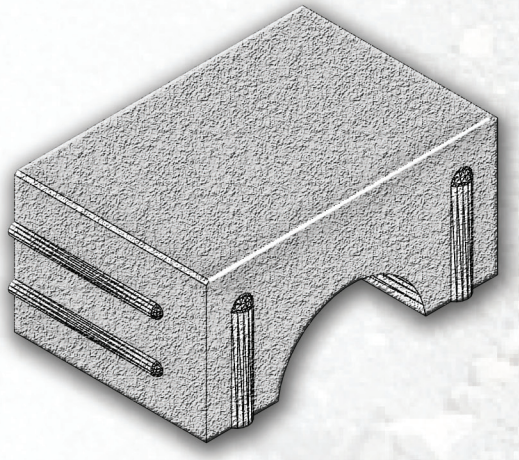

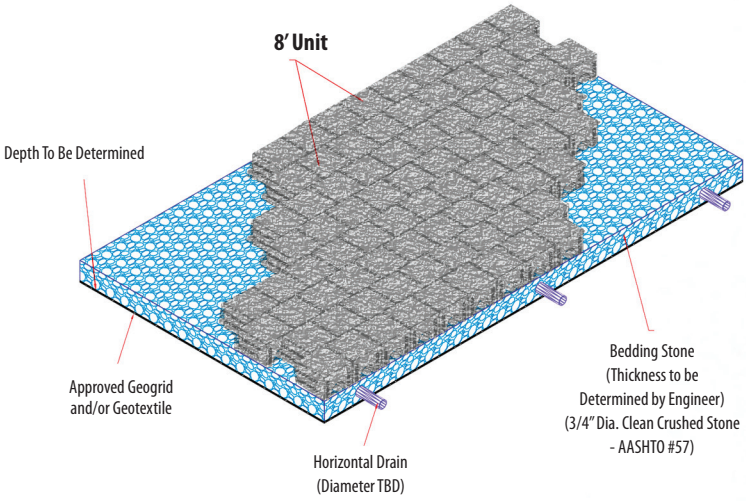

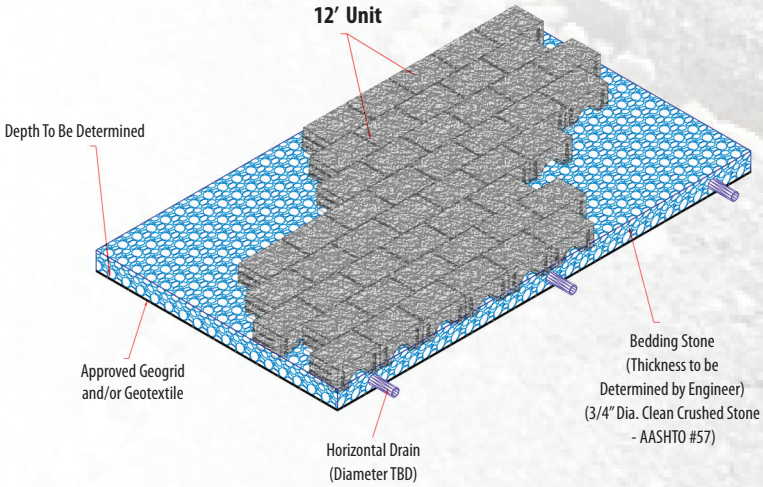

LEED CREDITS

Water Efficiency (WE)
- WEc1,WEc2,Wec3

Sustainable Sites (SS):
- Stormwater Design SS 6.1
- Stormwater Design SS 6.2
- Heat Island Effect SS 7.1

Materials & Resources (MR):
- Construction Site Waste Water MR 2.1 / MR 2.2
- Recycled Content MRc4
- Regional Materials MR c5

Credit 6.1:
Stormwater Design, Rate & Quality Control: 1 point
Limit distribution of natural water flows by managing stormwater runoff.

Credit 6.2
Stormwater Treatment: 1 point
Implement a stormwater management plan that reduces impervious cover, promotes on-site filtration and eliminates contaminants.

Credit 5.1
Site Development: 1 point
Protect or restore habitat

Credit 7.1
Heat Island Effect, Non Roof: 1 point
Reduce heat islands

Materials & Resources
Credit 5.2 Regional Materials: 1 point

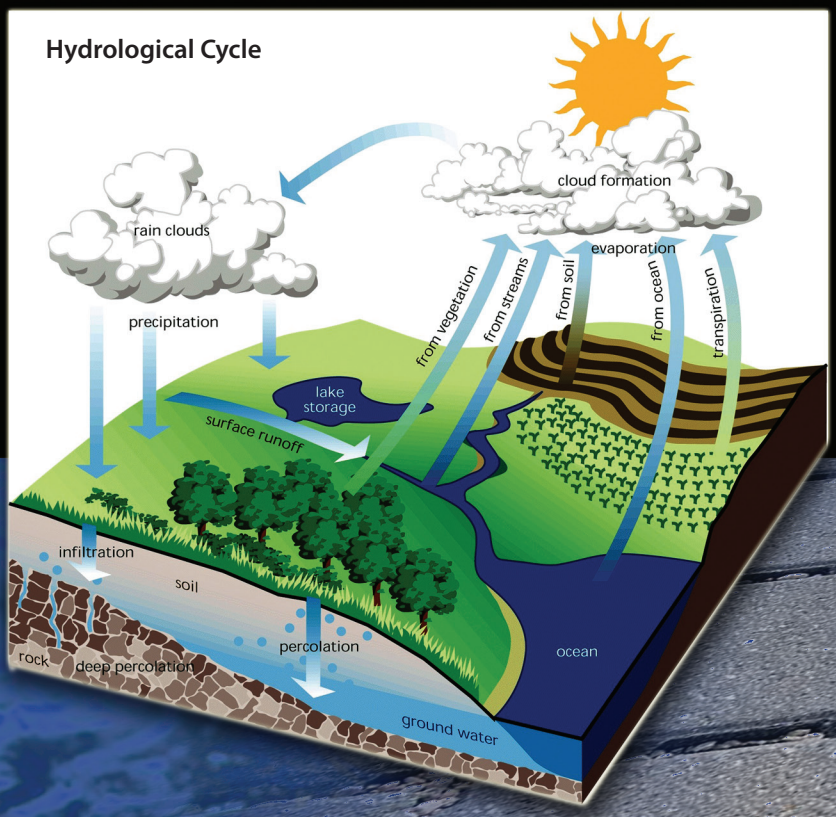

DISTRIBUTED BY:

Going Green
Green Pavers

For more information: WWW.AQUAARCH.COM

AquaArch™

38200 Hwy 16
Watson, LA 70706

AquaArch™ may change product specifications without notice. The AquaArch™ system is suitable for use in the application described in our literature and on our website, provided proper installation and engineering principles are followed. Professional engineering should be consulted before installation of AquaArch™ units to assure proper design. **ALL EXPRESSED OR IMPLIED WARRANTIES, INCLUDING THOSE OF MERCHANTABILITY AND FITNESS FOR A PARTICULAR PURPOSE ARE DISCLAIMED.**

REV. 1242017